ST2400E SERIES

For data center and remote network applications that require low-speed connections, the Data Connect ST2400E modem series incorporates the latest advances in modem design to deliver efficient and reliable performance.

The Data Connect ST2400E series modem has been developed to meet the most stringent environmental and performance demands of the commercial and industrial application. Every relay, transformer, capacitor, switch and connector is selected for its ability to withstand industrial environmental demands.

The industrial-rated Data Connect ST2400E may be housed in an optional metal enclosure and is built to meet the most stringent criteria. Temperature ratings, for example, range from -40°C to + 85°C. Versatile power supply options will meet most industrial applications.

At connect speeds of 2400bps and below, our patented Quick Connect features reduce modem connect time by as much as 50%.

The Data Connect ST2400E series modem is available in commercial and industrial single-port stand-alone configurations. Rackmount configurations are also available.

Key Features

Standard 2-Wire Dial-up

2-Wire and 4-Wire Leased-Line or Short Haul Operation

AT Command Set

Standard Error Correction and Compression

RS232 & RS485 Terminal Interfaces

Asynchronous and Synchronous DTE Support

Exclusive Quick Connect

General Specifications

Compatibility: V.22bis, V.22, Bell 212A.

DTE Interface: RS232C (V.24), Synchronous or Asynchronous – Autobaud or selectable formats and rates to 4.8Kbps. Industrial model includes RS485.

Auto Dial Modes: Standard AT compatible dial commands or DTR dial or stored number.

Answer Modes: Standard auto answer or manual answer under DTE control.

Error Correction: V.42 and MNP 2-4 error correction.

Data Compression: V.42bis and MNP5 data compression.

Configuration Control: Standard AT commands for both local and remote configuration.

Diagnostics: V.54 through AT commands.

Network Interface: Dial-up – 2-Wire Pulse or DTMF
XMT level – 12dBm
RCV sensitivity - -43dBm

2-Wire and 4-Wire Leased and short-haul
XMT level – Adjustable
RCV sensitivity - -43dBm

Power: Stand-alone single-port
Standard units automatically adjust to 9VAC or 9-14VDC

Power Supply Options: 5.5-14VDC, 18-75VDC, 66-160VDC

Rackmount - Standard CC-2016 rack automatically adjusts to 85-265VAC, 27-440Hz. Optional DC Supply automatically adjusts to positive or negative 36-75VDC

Environmental:

Commercial Unit – Operating temperature range 20°C to +70°
Humidity – 90% non-condensing.

Industrial Unit - Operating temperature range -40°C to +85°C
Humidity – 95% non-condensing.

Approvals: FCC Part 68 & Part 15, Class A.
Optional International approvals are available.

Physical:

Commercial Unit – Dimensions
5.30"L X 5.05"W X 1.53"H
Weight - 12oz.

Rackmount Unit – Fits CC-2016 rack
4.73"L X 4.60"W X 80"H
Weight – 9oz.

Industrial Unit – Dimensions
6.190"L X 5.120"W X 1.750"H
Weight – 32oz. (Metal Enclosure)

Model Numbers and Optional Features

DCE/ST2400E-000-2	2-wire standalone
DCE/ST2400E-034-2	2-wire standalone, Quick Connect
DCE/ST2400R-034-2	2-wire rackmount, Quick Connect
DCE/ST2400E-030-4	4-wire standalone
DCE/ST2400R-030-4	4-wire rackmount
DCE/ST2400E-330-4	4-wire standalone, 19-75VDC
DCE/STCC-2016-01	115VAC chassis
DCE/STCC-2016-02	36-75VDC chassis
DCE/STCC-2016-03	230VAC chassis
DCE/STCC-2016-07	18-36VDC chassis

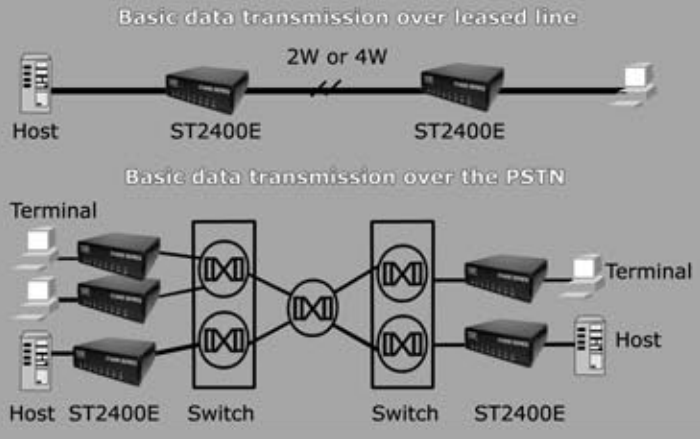

DATA CONNECT ENTERPRISE

3405 Olandwood Court,
Olney, MD 20832
301-924-7400
Fax 301-924-7403

www.data-connect.com
www.dataconnectus.com

Doc no. 06042008ST2400E

Distributed by www.clickitdirect.com