User's Manual
ANS-205
5-port Industrial 10/100 Mbps Ethernet Switch

QUALITY COMMUNICATIONS PRODUCTS
Made in the U.S.A.

Introduction:

The ANS-205 has 5 Ethernet Switching ports that support 10/100Base-T, with a 10/100M auto-negotiation feature and auto MDI/MDIX function.

It can connect 5 workstations and automatically switches the transmission speed (10 Mbps or 100 Mbps) for corresponding connections. The flow control mechanism is also negotiated.

LEDs embedded in RJ-45 jacks make for easy monitoring. Port connectors are shielded RJ-45. A power source for +10 to +30VDC is required.

Features:

- Automatic MDI / MDI-X crossover for plug-and-play
- Each port supports both 10/100 Mbps speed auto negotiation
- Store-and-forward architecture
- Full duplex IEEE 802.3x and half duplex backpressure flow control
- 1.4Gbps high performance memory bandwidth.
- Integrated look-up engine with dedicated 1 K unicast MAC addresses.
- Supports +10 ~ +30V DC voltage
- Supports operating temperatures from –30 ~ +75 ℃
- DIN rail mount for industrial usage
- 1.4Gbps high performance memory bandwidth.

Specifications:

- Compatibility:IEEE 802.3, IEEE802.3u, IEEE802.3x
- Interface: 10/100 Base-T
- Port: 10/100 Mbps x 5 (Shielded RJ-45 Jack)
- Provides LEDs for network and power monitoring
- ESD Protection:
  8KV Contact Discharge
  15KV Air-Gap Discharge
- Cables:
  10 Base-T (Cat.3, 4,5 UTP cable; 100m Max.)
  100 Base-T (Cat.5 UTP cable; 100m Max.)
- Environment:
  Operating temperature: –30 ~ +75 ℃
  Storage Temperature: –40 ~ +85 ℃
  Relative Humidity: 10% to 90% non-condensing
- Dimensions: 32.30 x 99.00 x 77.50 mm (W x H x D)
- Power requirements: +10 to +30V DC (Removable Terminal Block)
- Low power consumption: 0.052A@24VDC, +/- 5% arrowed. (Worst-case test**:** All five ports link at 10BT)

LED functions:

Standard RJ45 female connectors are provided. A standard RJ45 plug cable is all that is necessary to connect your device to the unit since switch that supports auto crossover. Table 1 shows the LED indicator functions. The module includes an internal.

Table 1

LED	Color	Description
Power	Red	Power is On
	Off	Power is Off
10/100M (Port 1)	Yellow	Link to 10 Mbps
	Green	Link to 100 Mbps
	Off	Not Networking
10/100M (Port 2)	Yellow	Link to 10 Mbps
	Green	Link to 100 Mbps
	Off	Not Networking
10/100M (Port 3)	Yellow	Link to 10 Mbps
	Green	Link to 100 Mbps
	Off	Not Networking
10/100M (Port 4)	Yellow	Link to 10 Mbps
	Green	Link to 100 Mbps
	Off	Not Networking
10/100M (Port 5)	Yellow	Link to 10 Mbps
	Green	Link to 100 Mbps
	Off	Not Networking

Pin-Out:

Pin#	Signal Name	Function
1	TD+	Transmit Data
2	TD+	Transmit Data
3	RD+	Receive Data
4	NC	No Connection
5	NC	No Connection
6	RD-	Receive Data
7	NC	No Connection
8	NC	No Connection

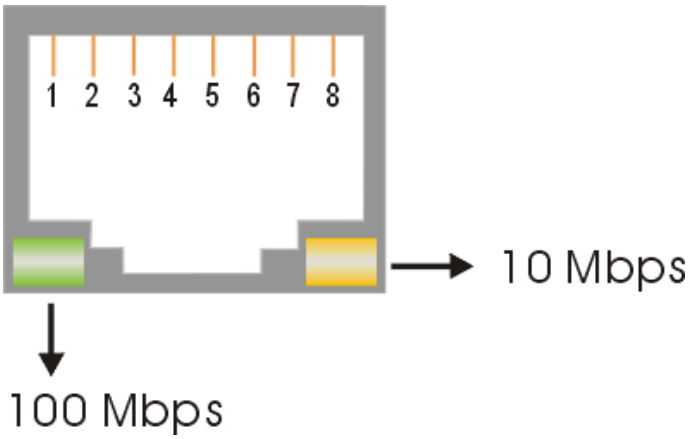

Ethernet Wiring:

When making a connection to
another device using straight-through UTP cable, make sure the MDI-X to MDI connection rule is followed. The following figure illustrates the pin assignments of a straight-through UTP and a crossover UTP cable:

RJ-45 to RJ-45 Ethernet Wiring - Straight Type (Host <--> Hub)

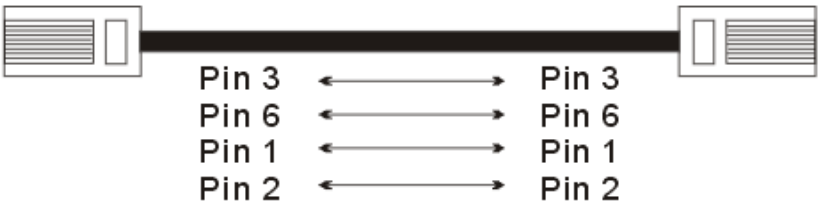

RJ-45 to RJ-45 Ethernet Wiring - Cross Type (Host <--> Host)

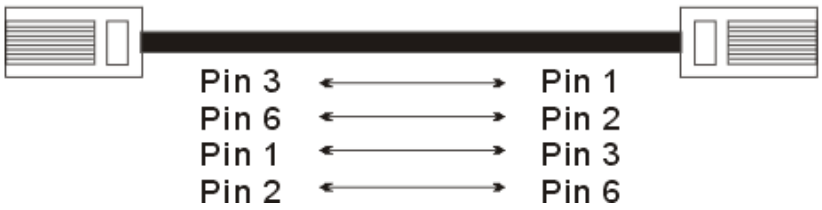

Checking Power:

Since the ANS-205 consumes 1.3W, ensure that your power supply is able to meet this demand. The Input voltage range is 10~30VDC. SEE PAGE 4 FOR WIRING INFO

External power supply is connected using the removable terminal block as shown below:

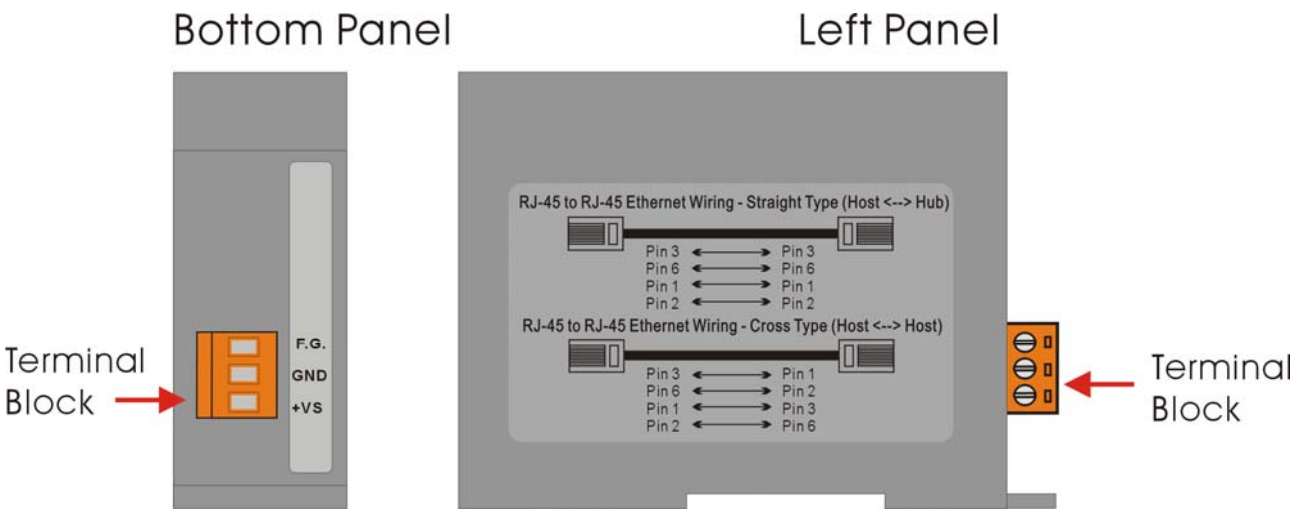

Dimensions:

The width of the ANS-205 is just 32.30 mm, so it can be used where space is important.

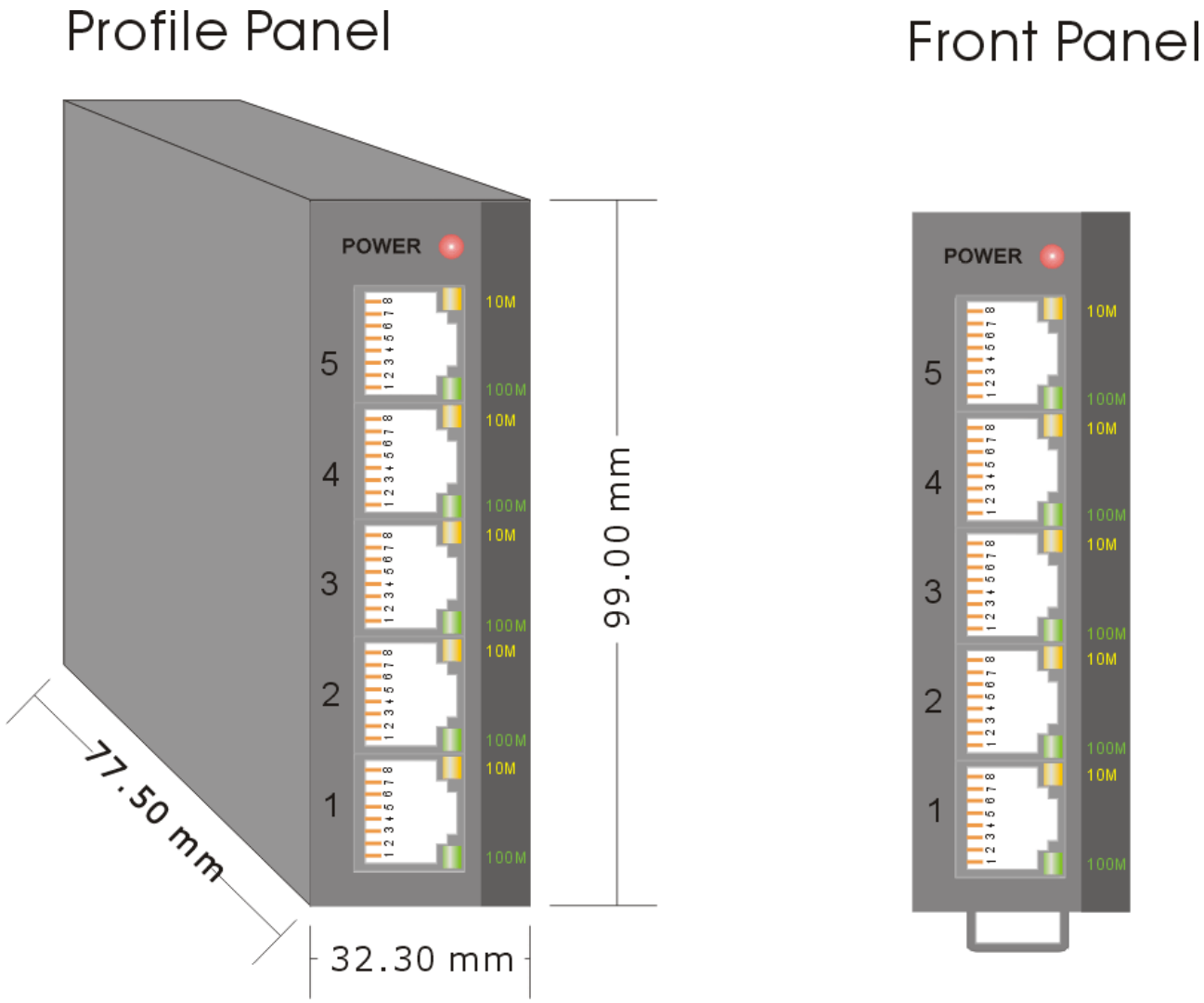

Pin Function For Terminal Block: External power supplies are connected using the removable terminal block: +Vs: Power input +10 to +30V GND : Ground and F.G. : F.G. stands for Frame Ground (protective ground). It is optional. If you use this pin, it can reduce EMI radiation; improve EMI performance and ESD protection.

The power supply ground is floating from the chassis or frame ground.

Power supplies can have a positive or negative ground and the power lead of the opposite value or it may have negative and positive power leads.

When wiring the power supply to the unit be sure to put the power supply negative ground lead to the middle slot/hole and the positive lead to the +Vs – if the your power supply has no ground lead but only + and – put the – to the ground/ middle slot/hole and the + to the +Vs. Don't let the F.G hole/slot confuse you – it's for Frame grounding which is used to reduce EMI radiation; improve EMI performance and ESD protection.

If your unit will be subject to lighting or power surges you can wire the FG to the building power ground to help reduce burn outs.