MIU POWER PORT 14.4 SERIES

To service the growing need for efficient, reliable data communication in a harsh environments of utility substations and industrial facilities, has developed a 14400bps modem that can operate from various AC/DC power supplies and survive high surge levels and extreme heat and cold. All this without compromising the performance expected from state-of-the-art communications devices.

With the rapid move toward “intelligent” substations, where meters, relays, RTU’s, SCADA systems, etc. are able to “talk” to a remote operator, communication devices such as modems are moving off the desktop and into the field, where the conveniences of 115VAC power outlets and climate control are usually hard to find.

Data Connect Enterprise has addressed this problem by developing the MIU PowerPort14.4 series modem designed specifically for harsh environments.

The MIU PowerPort14.4 series modem is a highly sophisticated full duplex, V.32bis data modem that is designed to interface with RS232, RS485 (external device), 5V logic (TTL) or simple send and receive signals. The MIU PowerPort14.4 modem operates at full or half duplex on dial-up or 2-wire and 4-wire leased line systems.

The MIU PowerPort14.4 series is powered through the RS232 (DB25) data interface port or External Jack. An optional 7-16VDC version is also available. A low voltage version (9-36VDC) is also available. The MIU PowerPort14.4 modem is designed to work in temperatures from 40 degrees Celsius to 85 degrees Celsius, and is surge protected on both the power and analog lines.

The MIU PowerPort14.4 series modem is bundled in a 5-3/8” X 1-3/8” non-metallic enclosure, suitable for desktop or wall mounting.

Also see our Data Sheets on the “Myriad” Rack Mount Modem Banks, MIU202T (Bell), MIU9.6FPD and MIU14.4 and MIU28.8 modems.

Key Features

Modem Interface Units AC/DC POWERED

SUBSTATION HARDENED Communication Interface Units

14.4kbps 2 & 4-Wire Leased Line Modem

Powered through the RS232 (DB25) data interface port or External Jack. (Optional 7-16VDC available)

IEC801-4 Surge Protection

-40 Degrees Celsius to +85 Degrees Celsius Operating Temperature

For Meters, Relays, SCADA etc.

General Specifications

Modem Line Speeds: Asynchronous 14400, 9600, 4800, 2400, 1200, 300bps

DTE Rates: Above modem line speeds (ie; with data compression) 57.6, 38.4, 19.2kbps

Standards: V.32bis, V.32, V.22bis, V.22, Bell 212A, Bell 103

Transmission Line: Dial or 2 & 4 Wire Leased Line

Compatibility: Hayes Extended AT Command Set

Powered through the RS232 (DB25) data interface port or External Jack. (Optional 7-16VDC available)

Case Size: 5-3/8" X 4" X1-3/8"

Digital Port: RS232 with DB9 Connector

Analog Port: RJ11 Modular Jack

Surge Protection: (Power Line) 8kV [Exceeds IEC801-4] (20kV {IE801-5} available if required)

Surge Protection: 3.75VAC

Environment: -40 Degrees Celsius to +85 Degrees Celsius, 0 to 95% humidity (non-condensing)

Certifications: FCC Part 68, Industry Canada

Model Numbers and Optional Features

DCE MIUPP14.4	2-wire dial-up standalone
DCE MIUPP14.4-DC	2-wire dial-up standalone DC power
DCE MIUPP14.4L	2-4-wire leased line standalone
DCE MIUPP14.4L-DC	2-4-wire leased line standalone DC power

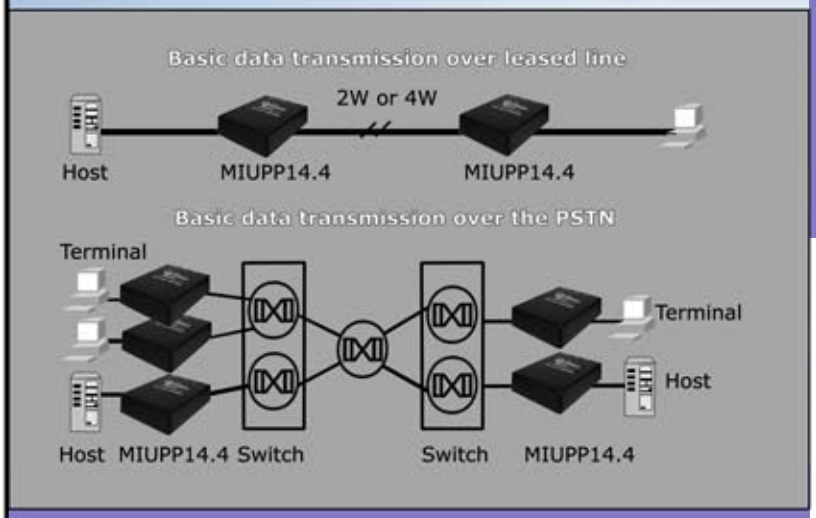

DATA CONNECT ENTERPRISE

3405 Olandwood Court,
Olney, MD 20832
301-924-7400
Fax 301-924-7403

www.data-connect.com
www.dataconnectus.com

Doc no. 06042008MIUPP144